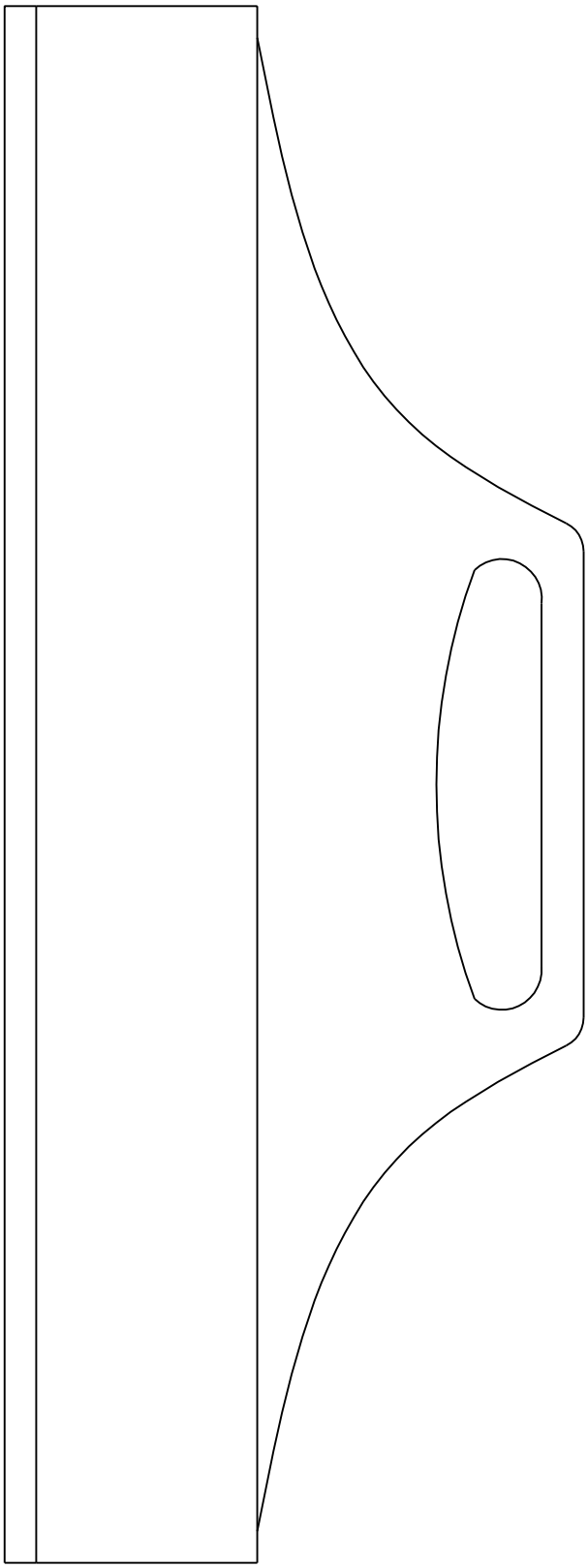

B
C
A
D
B

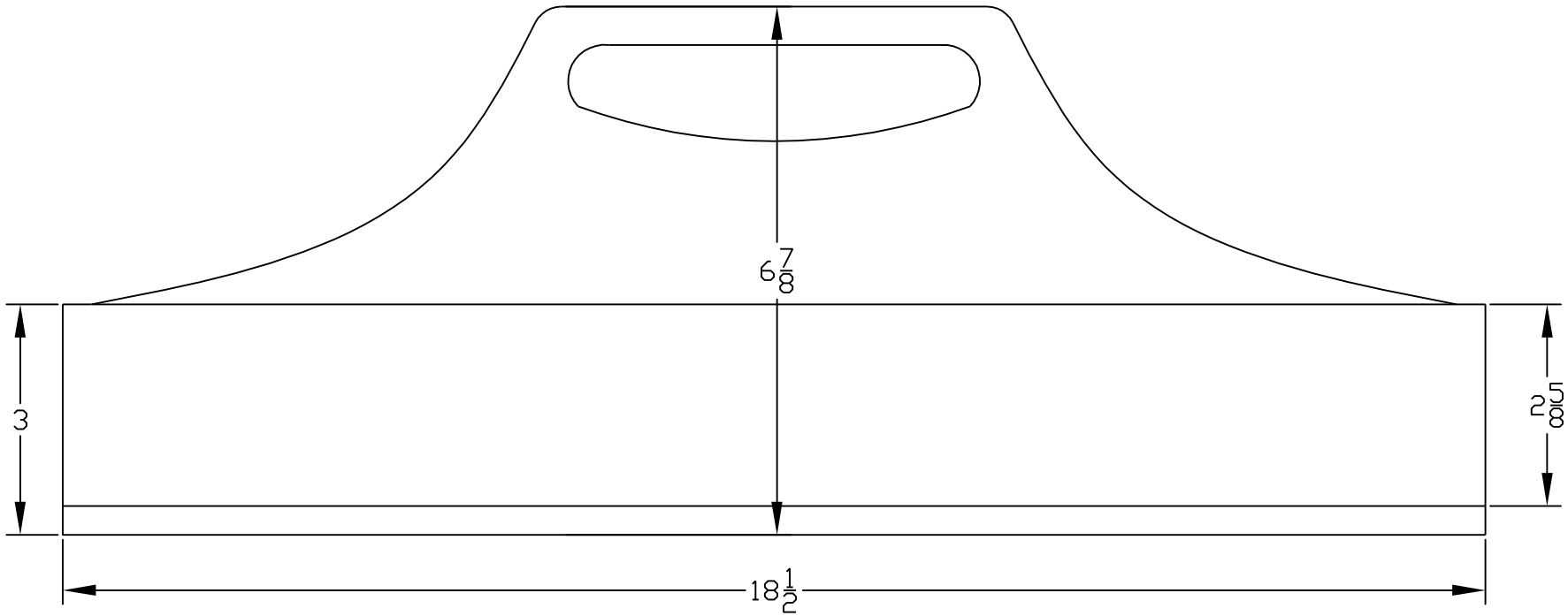
6 7/8
3
2 5/8
18 1/2

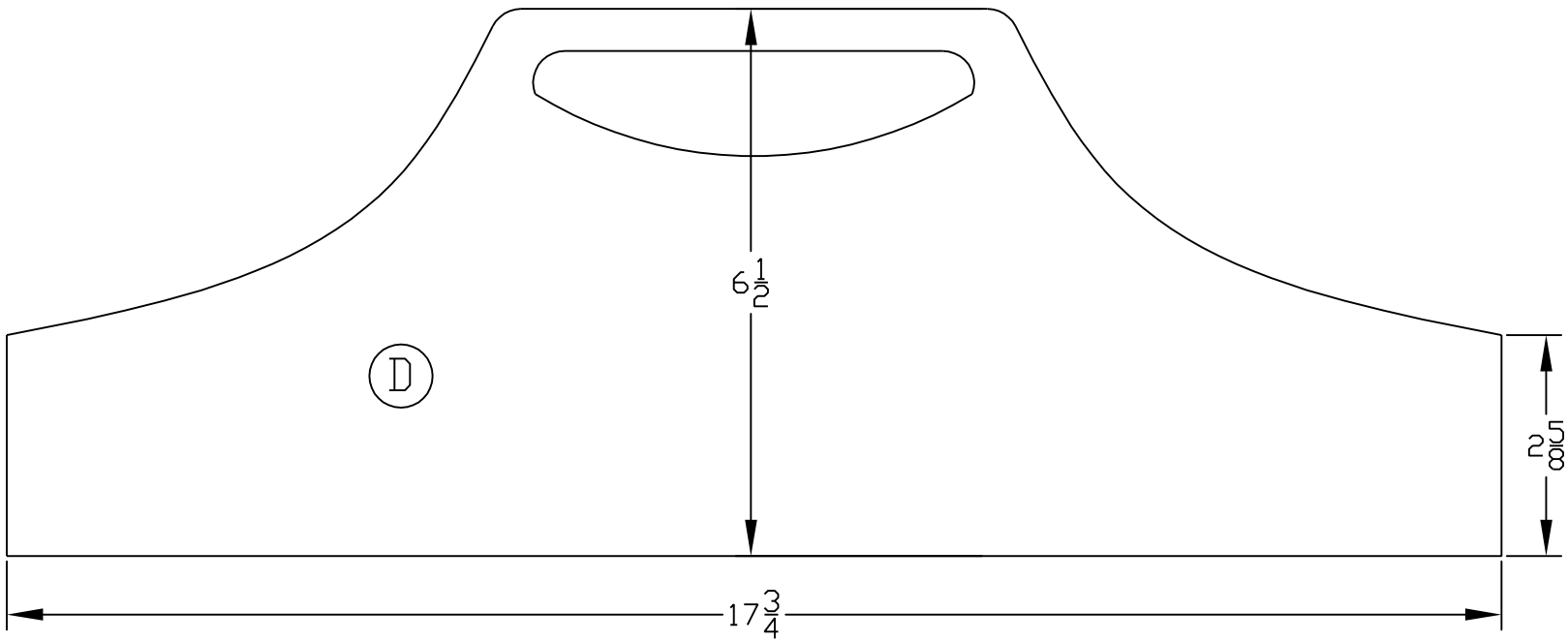
D
6 1/2
2 5/8
17 3/4

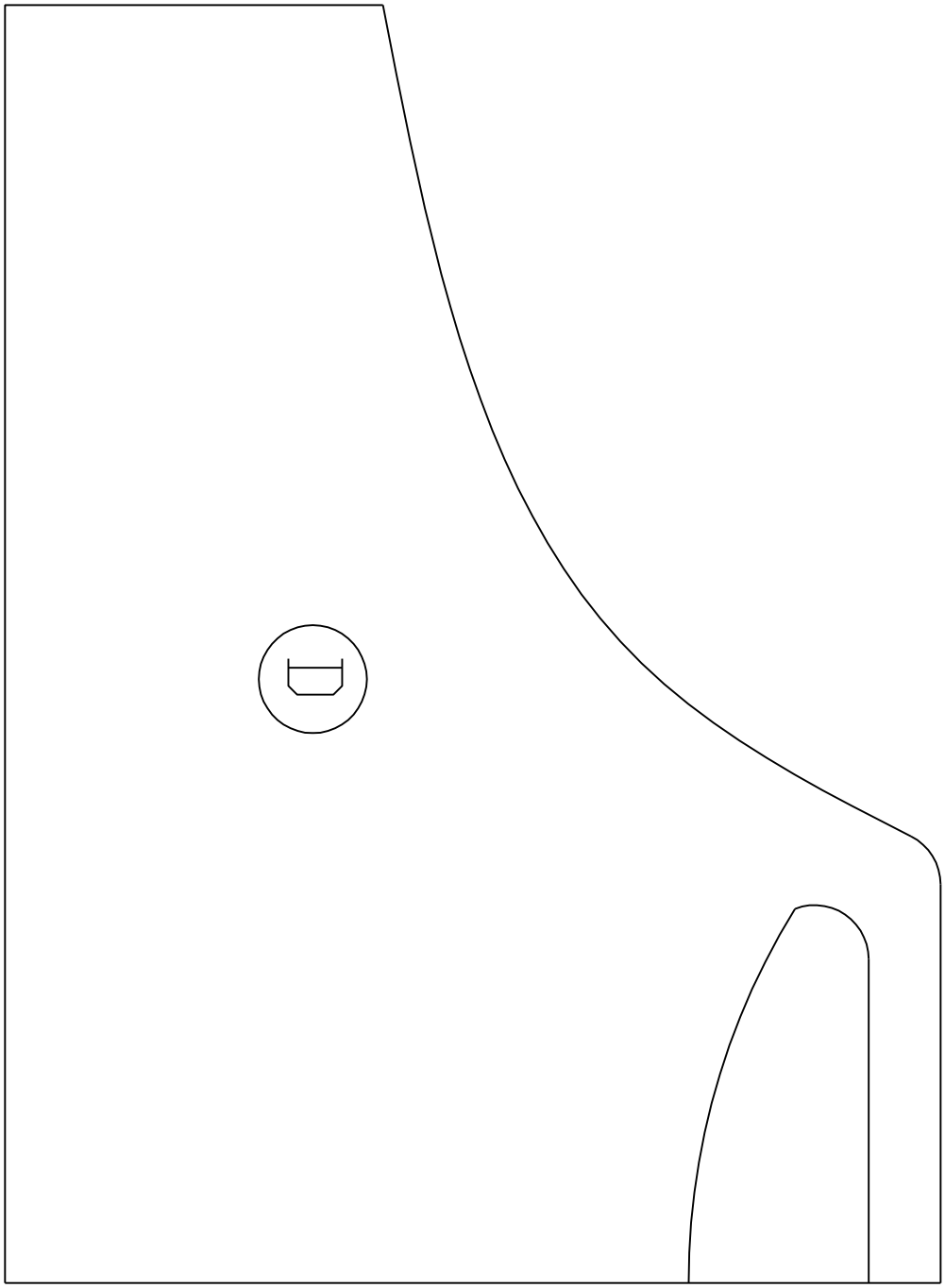

A
B
D
A
C

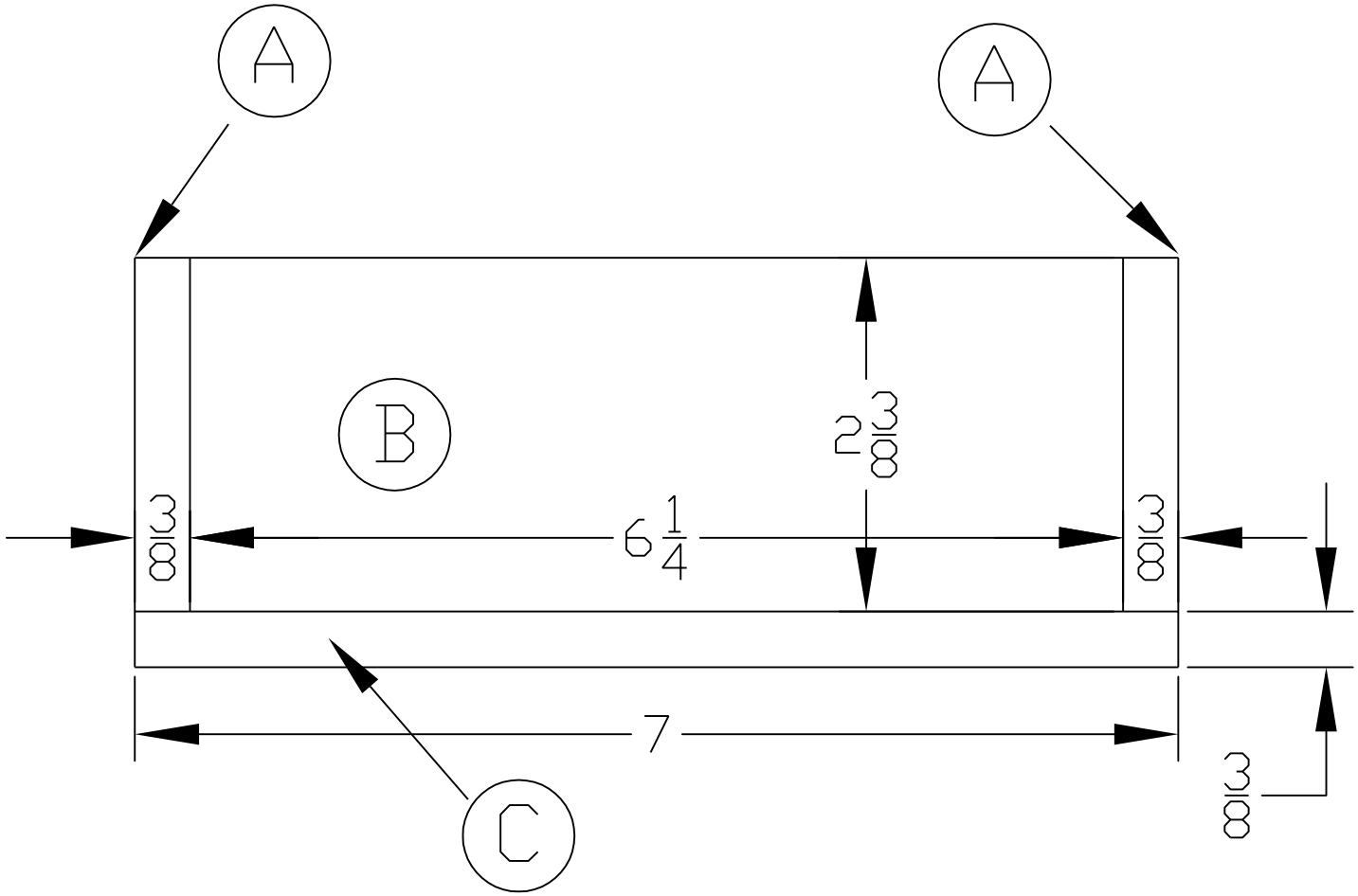
A
A
B
C
2 3/8
3/8
6 1/4
3/8
7
3/8