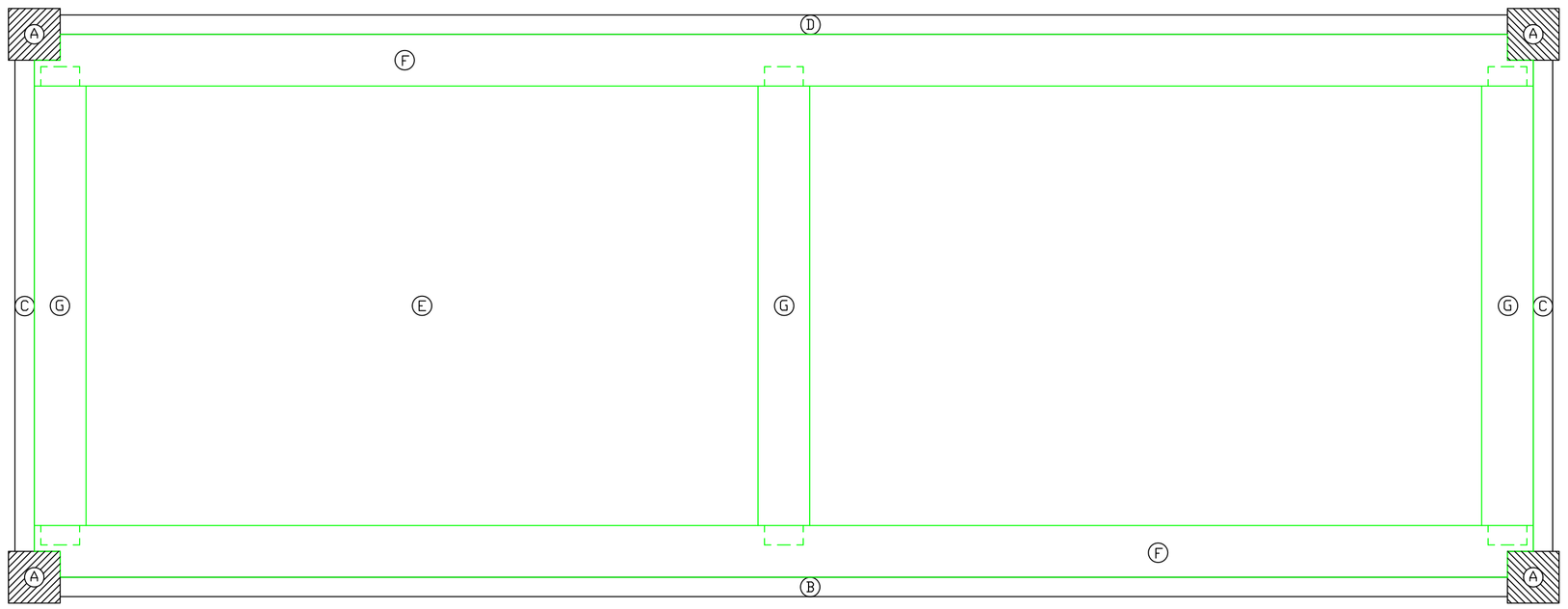

Top View of Desk Top Support Frame
Mounted Inside the Desk

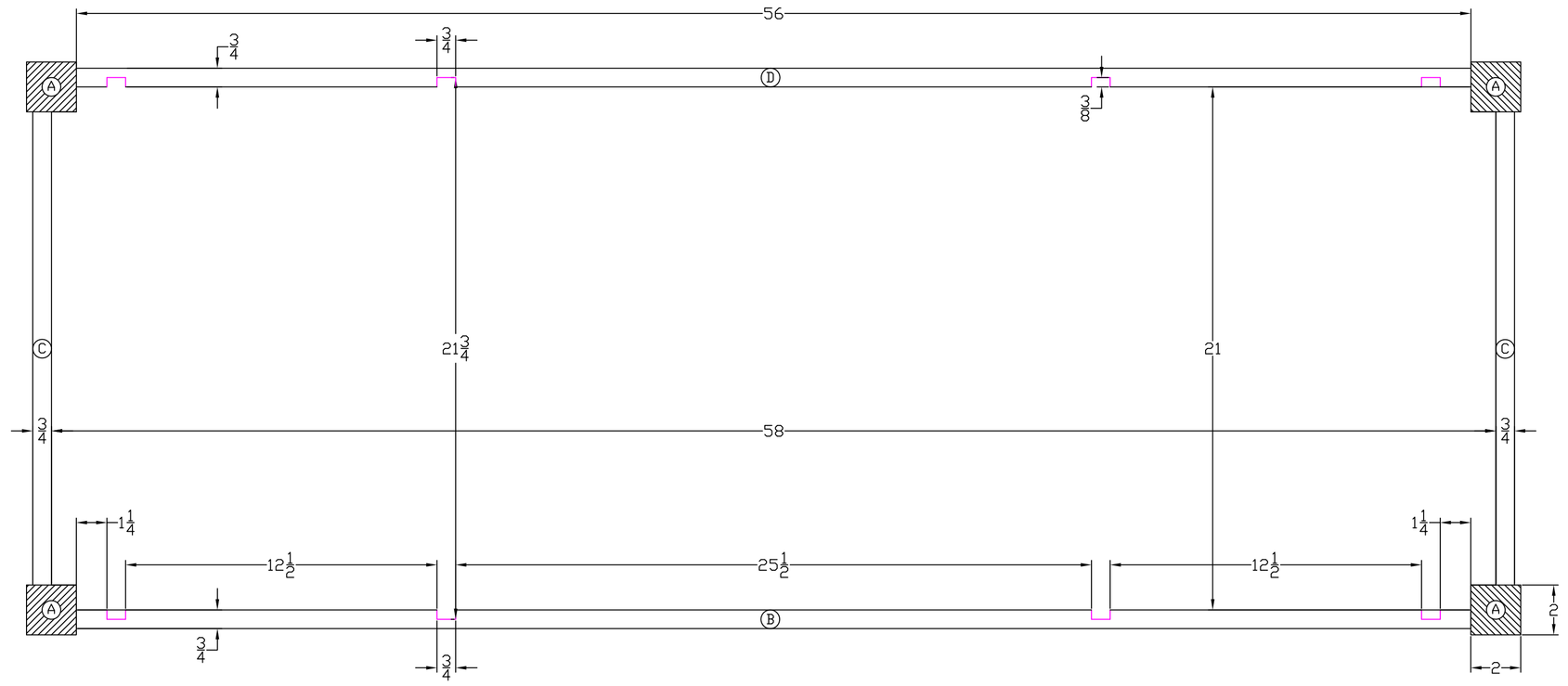

Top View of Desk Showing Inside Dimensions

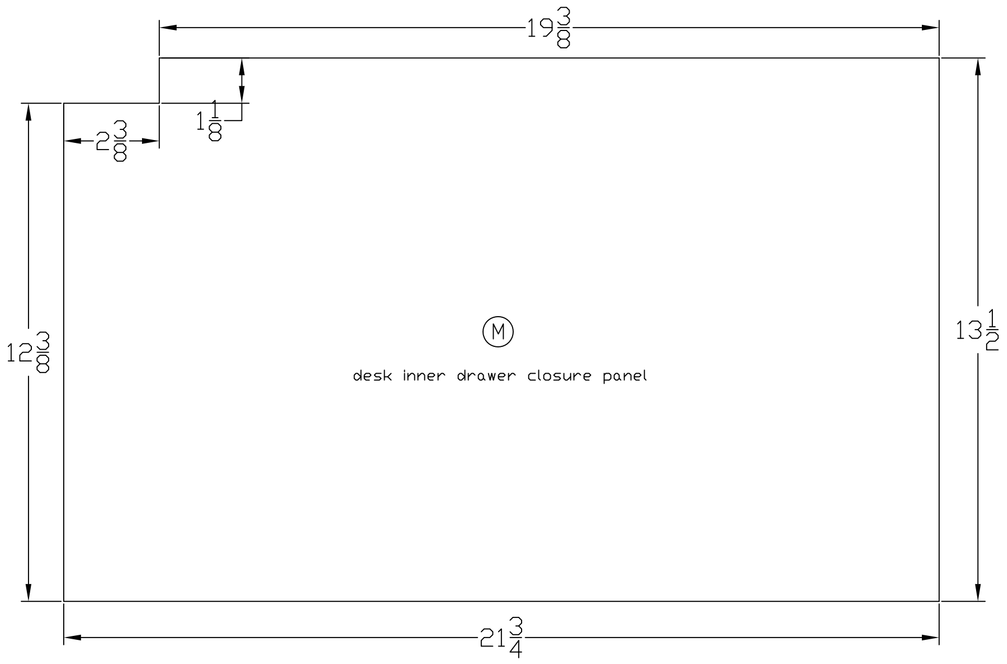

Views With Dimensions Desk
Inner Support Panels

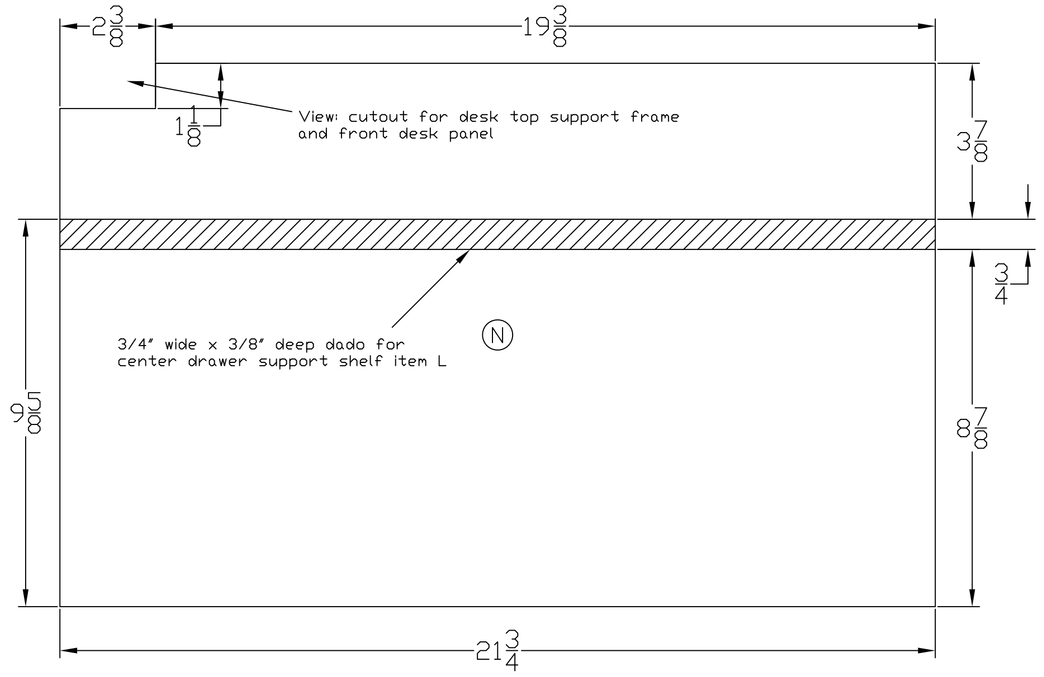

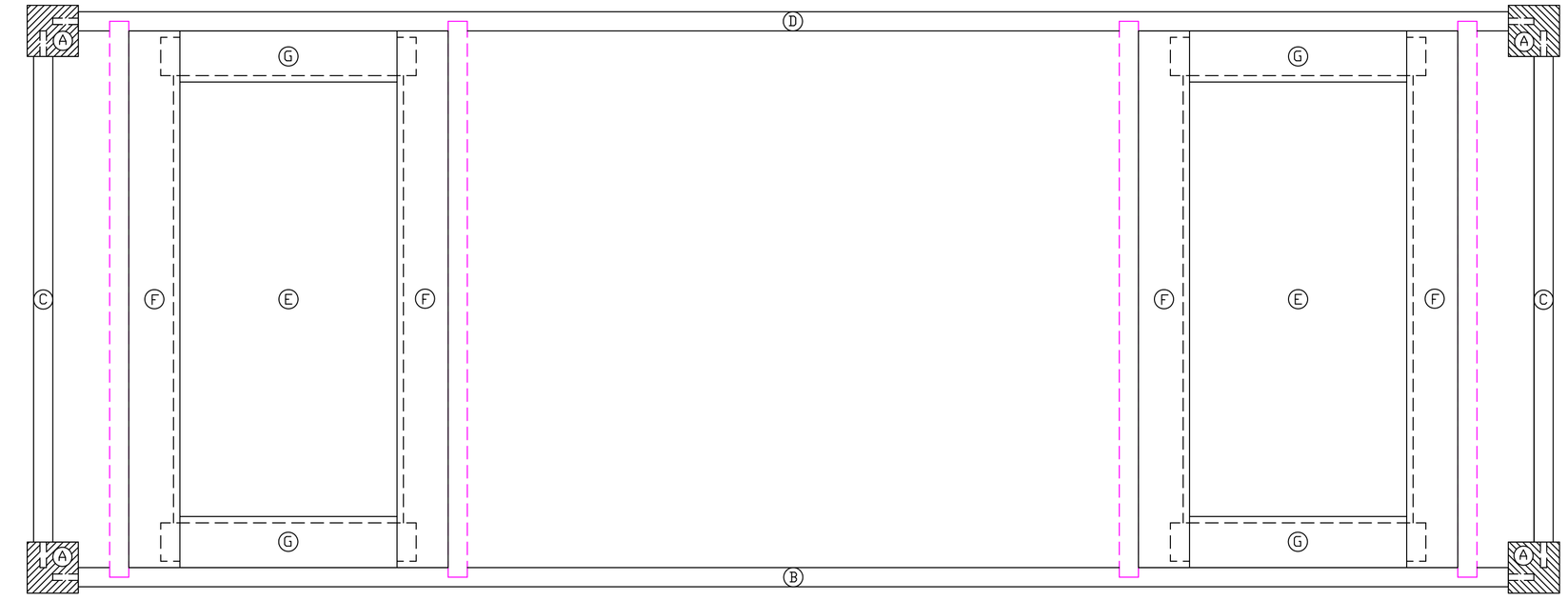

Top View of Desk Showing
Left & Right Inner Drawer Supports

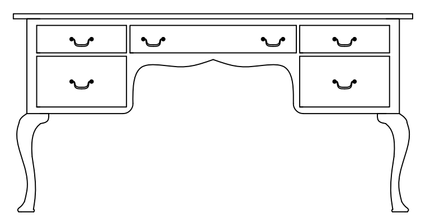

Scale: 1/4" & 3/8" = 1" as noted

Traditional Woodworking

Copy Right©1998 traditional woodworking.org

Ladies Chippendale Style Desk

traditionalwoodworking.org