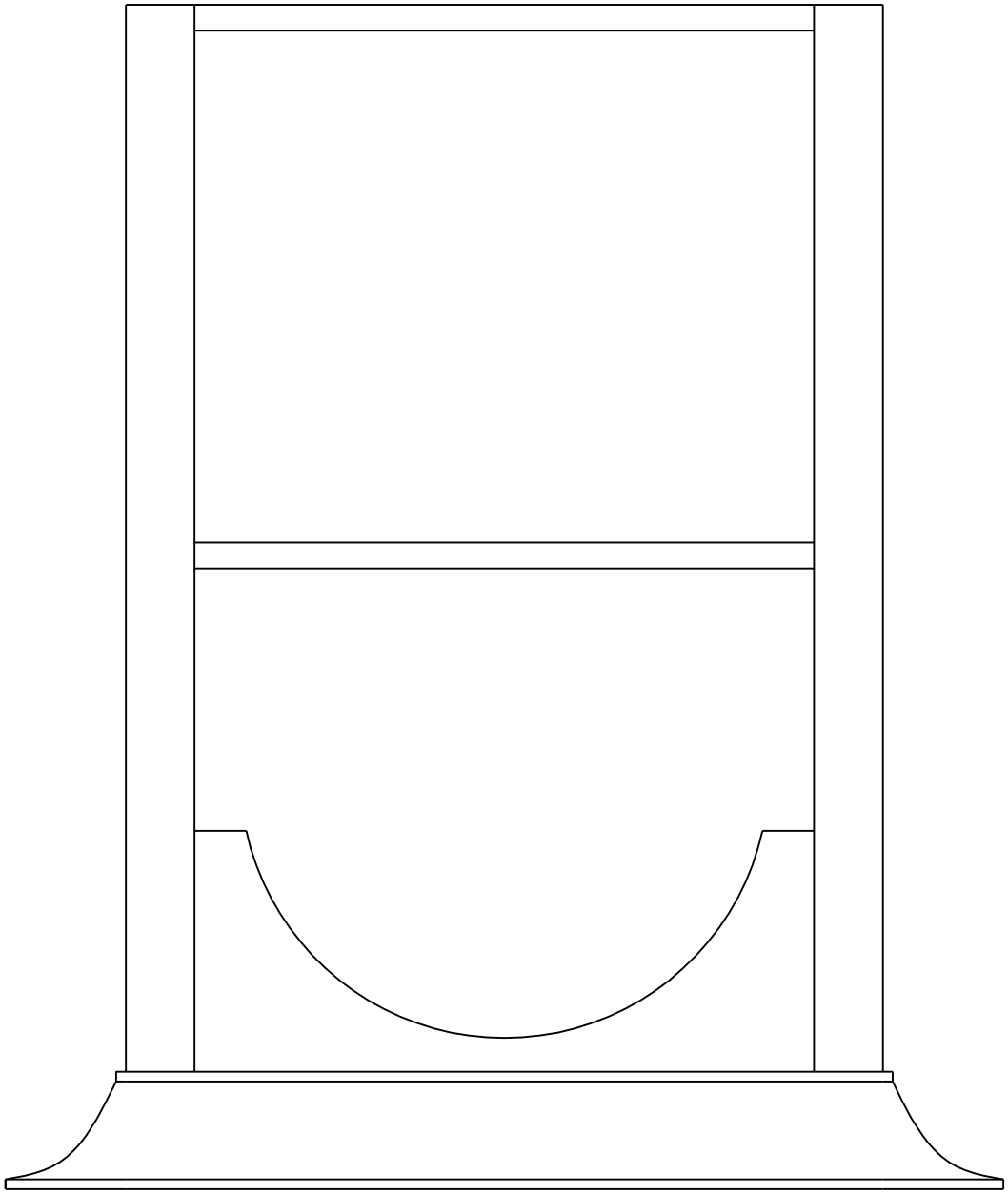

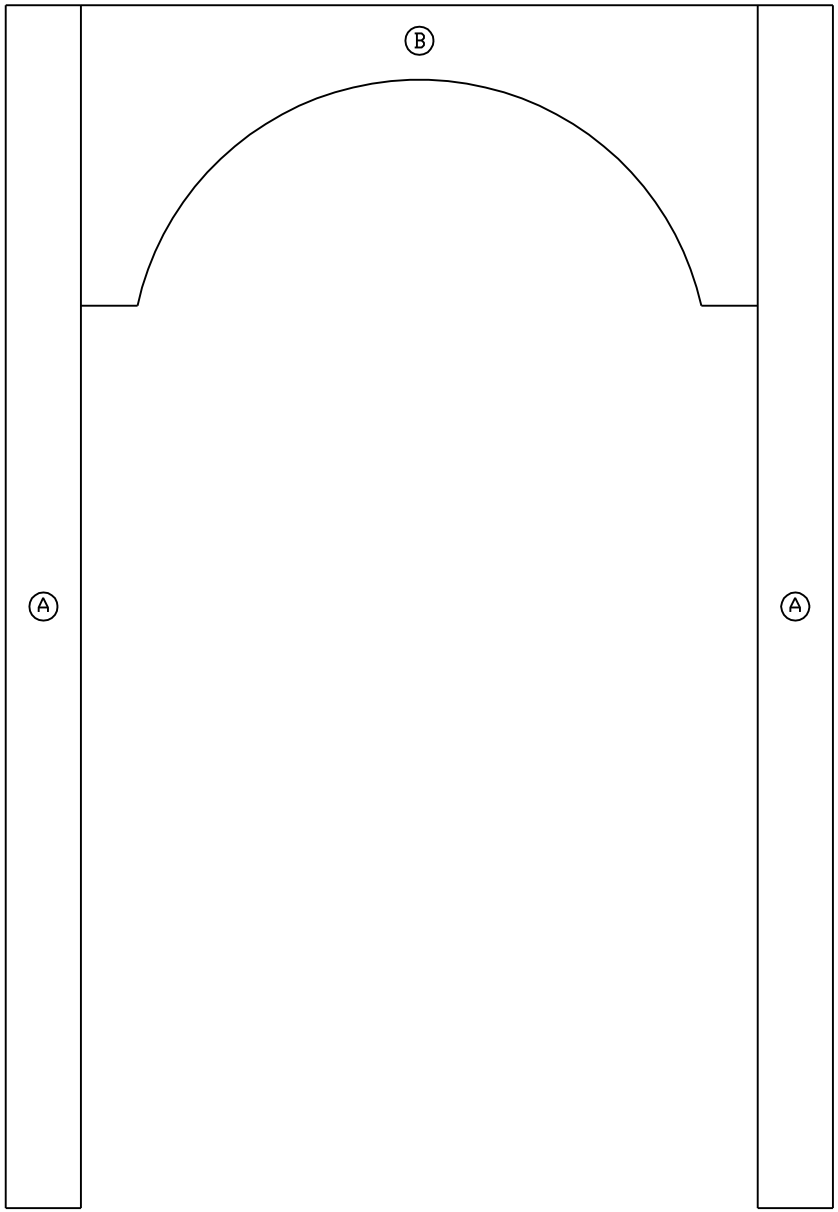
B
A
A

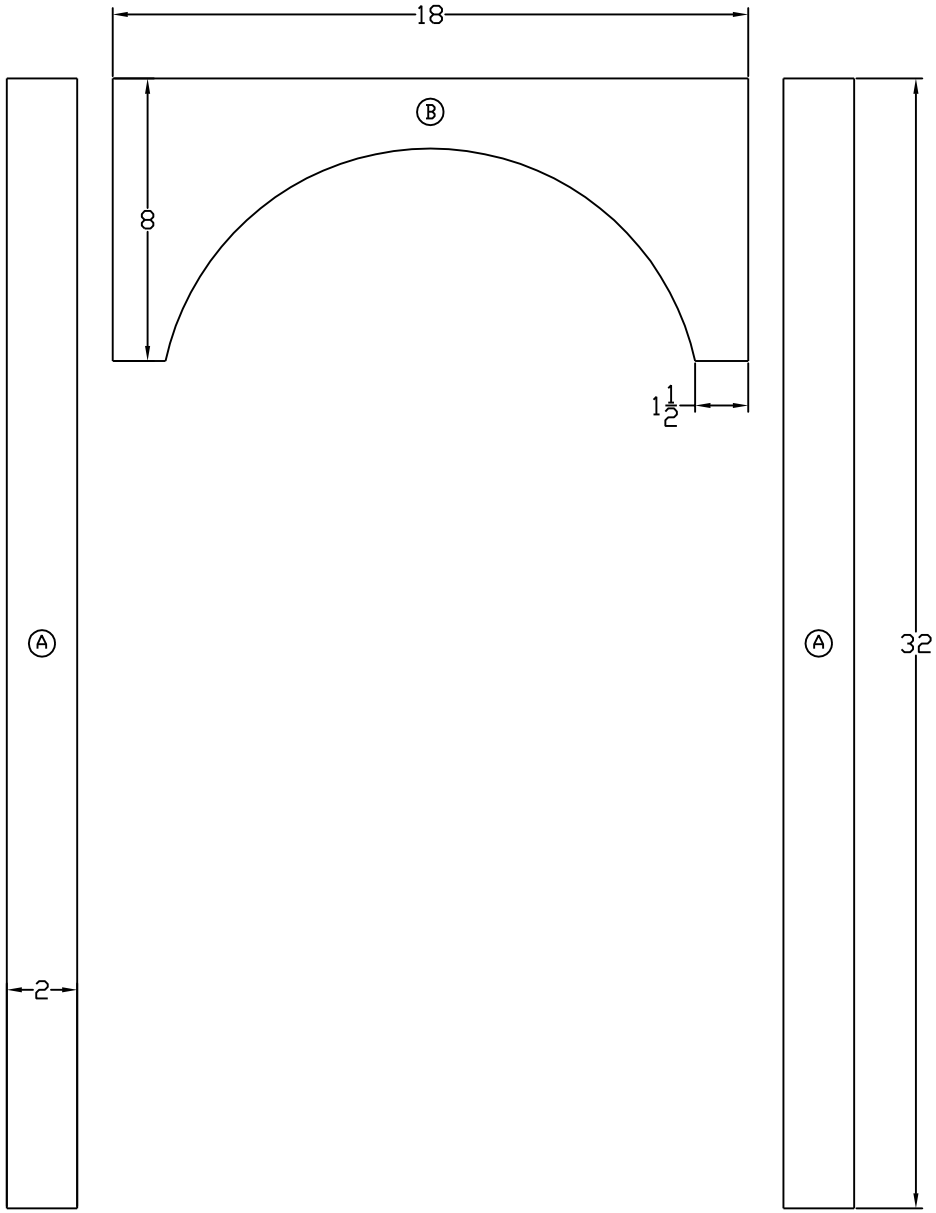
18
B
8
1 1/2
A
A
32
2

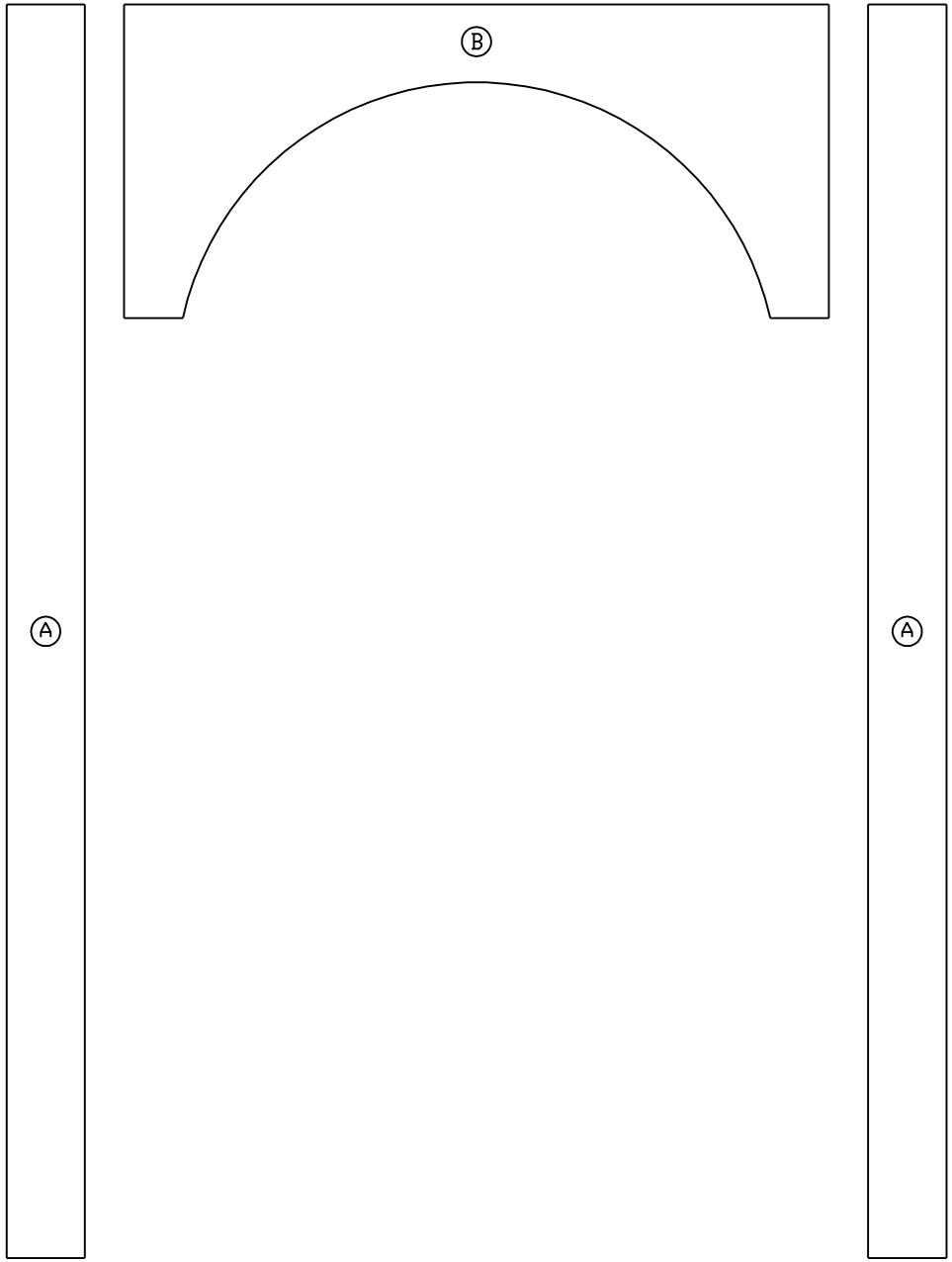
B
A
A

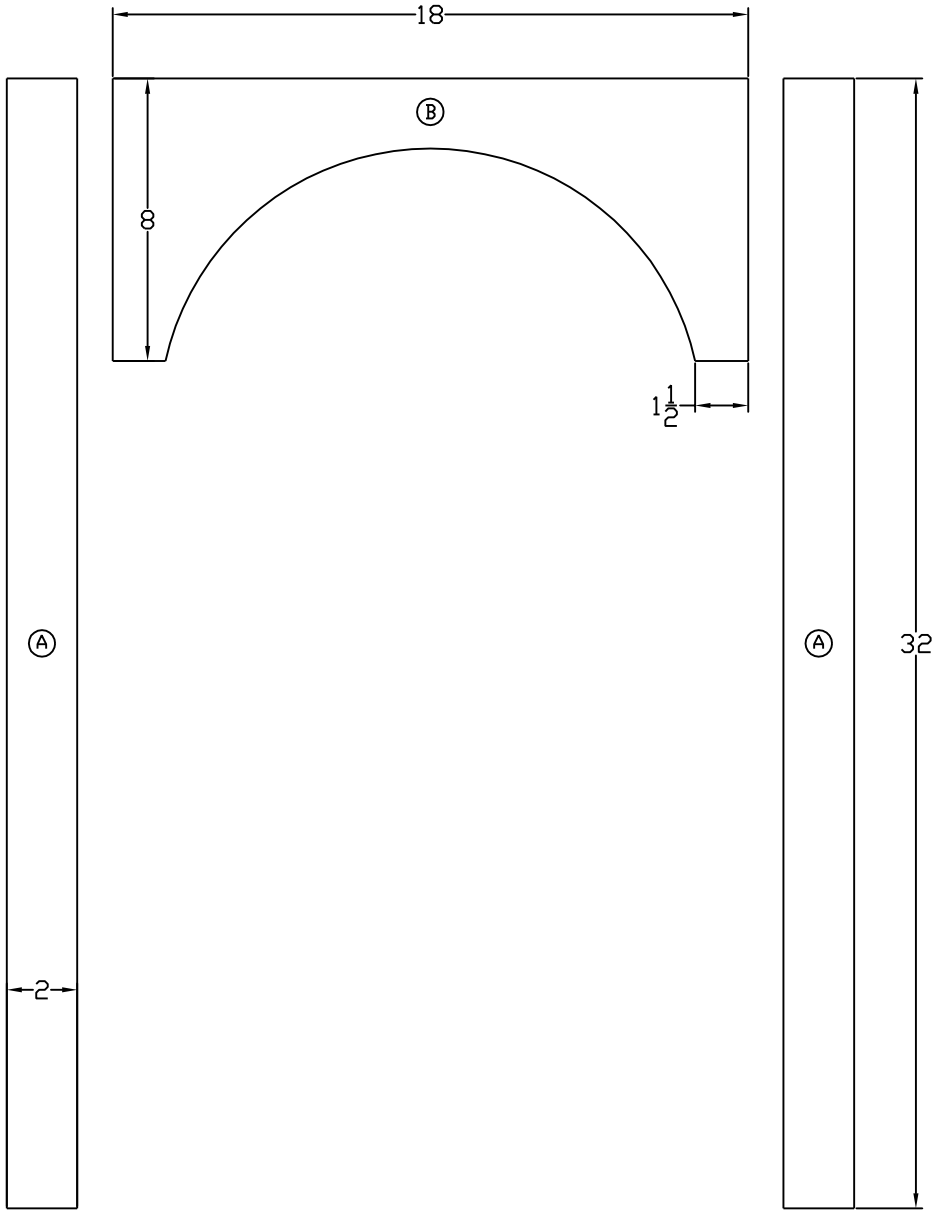
18
B
8
1 1/2
A
A
32
2

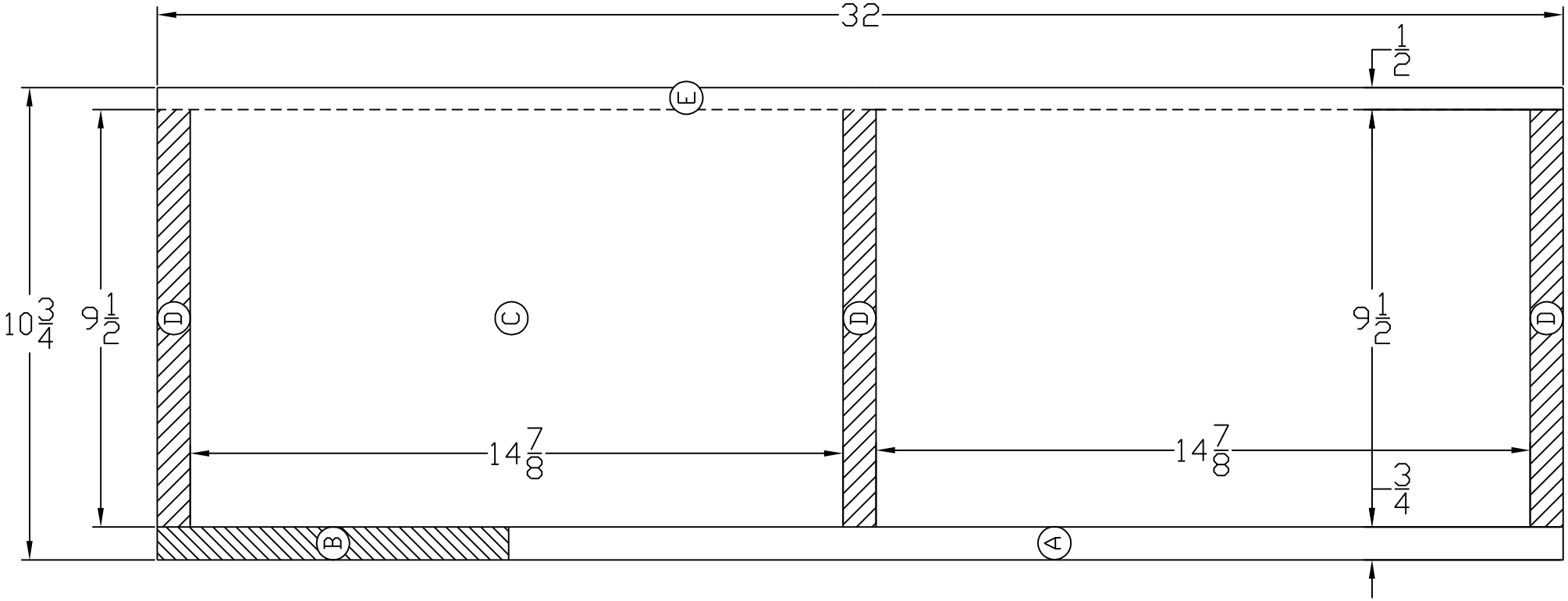
32
1/2
E
10 3/4
9 1/2
D
C
D
9 1/2
D
14 7/8
14 7/8
3/4
B
A

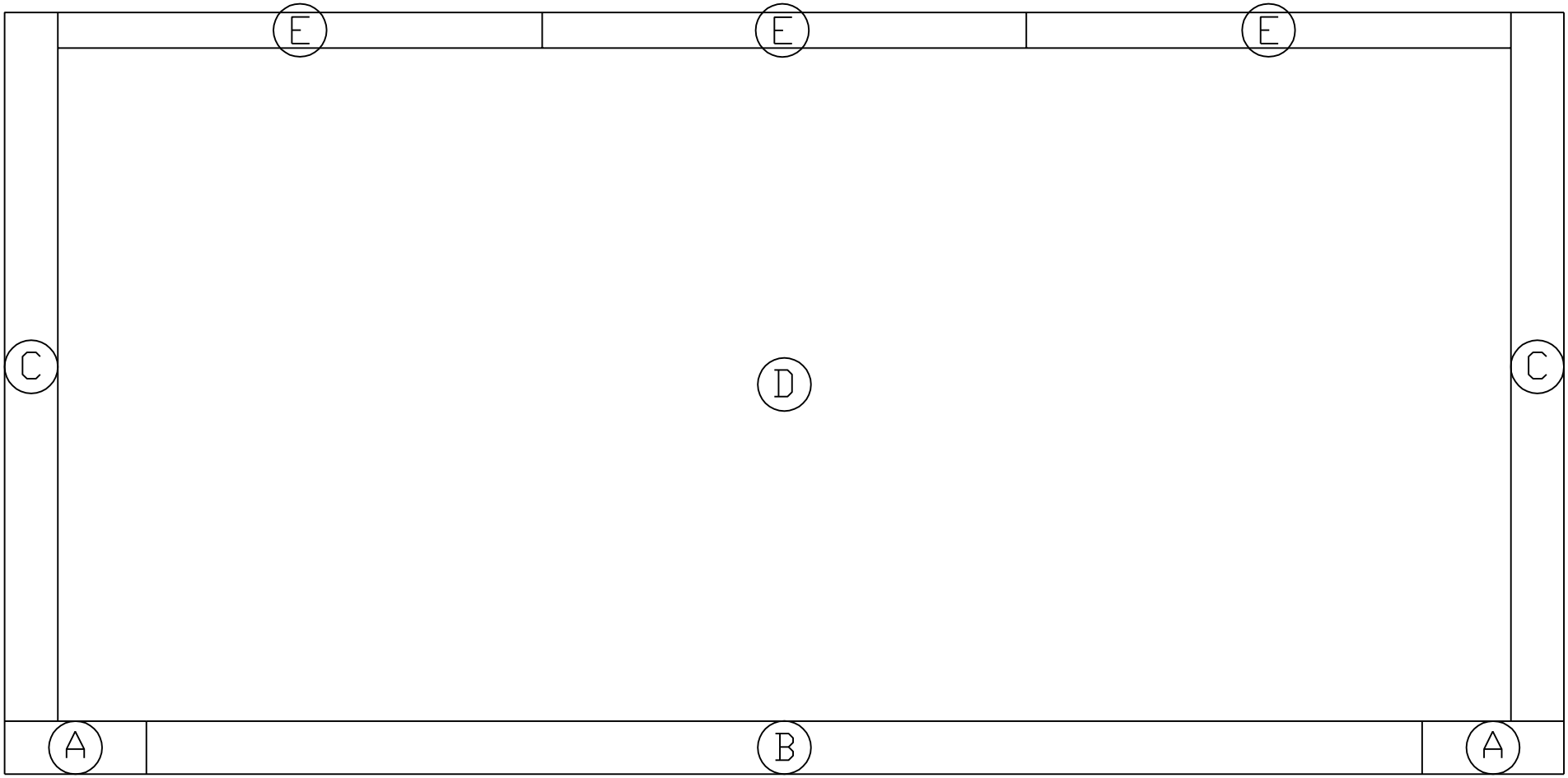
E
E
E
C
D
C
A
B
A

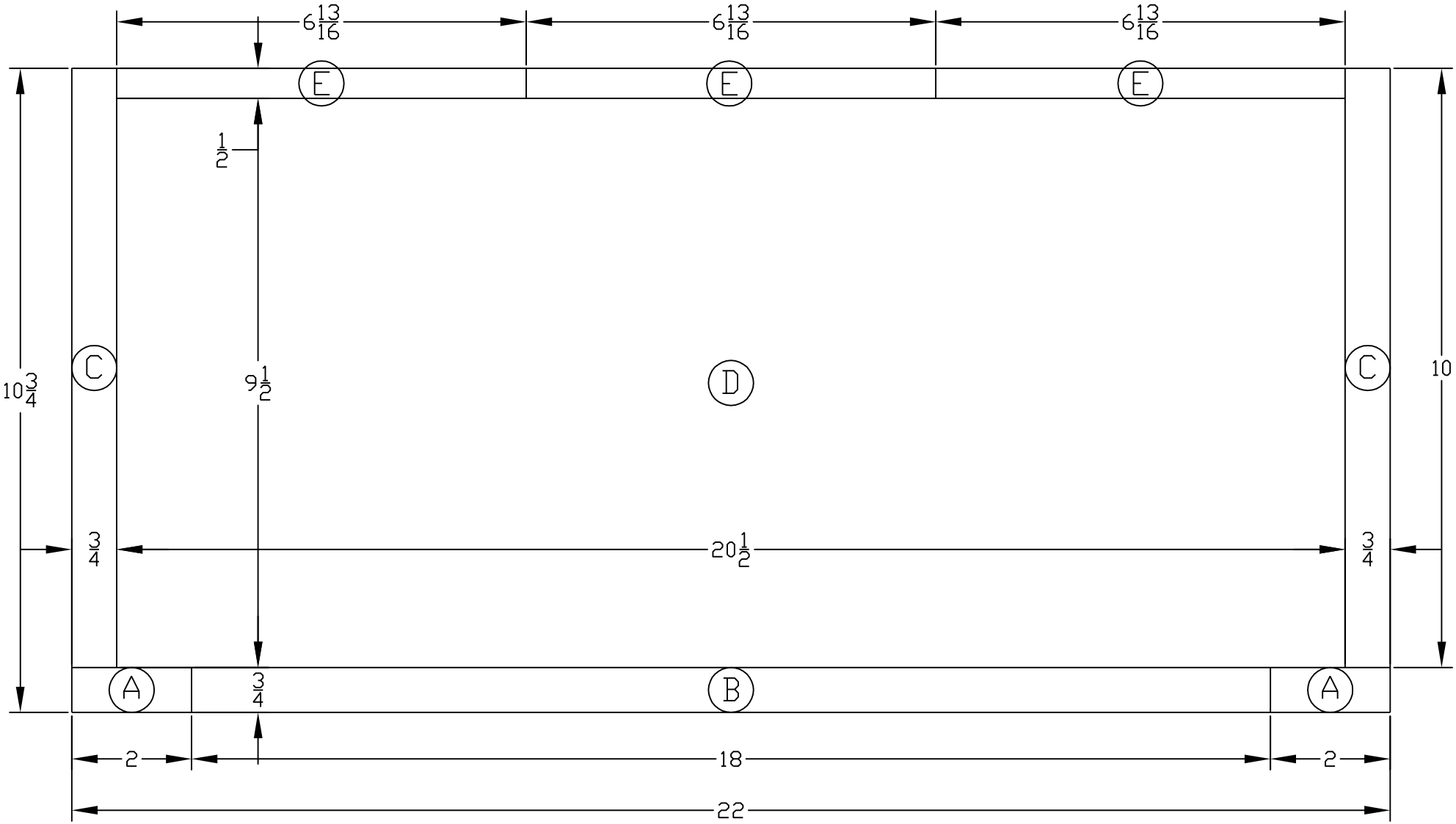
6 13/16
6 13/16
6 13/16
E
E
E
1/2
10 3/4
9 1/2
C
D
C
10
3/4
20 1/2
3/4
A
3/4
B
A
2
18
2
22

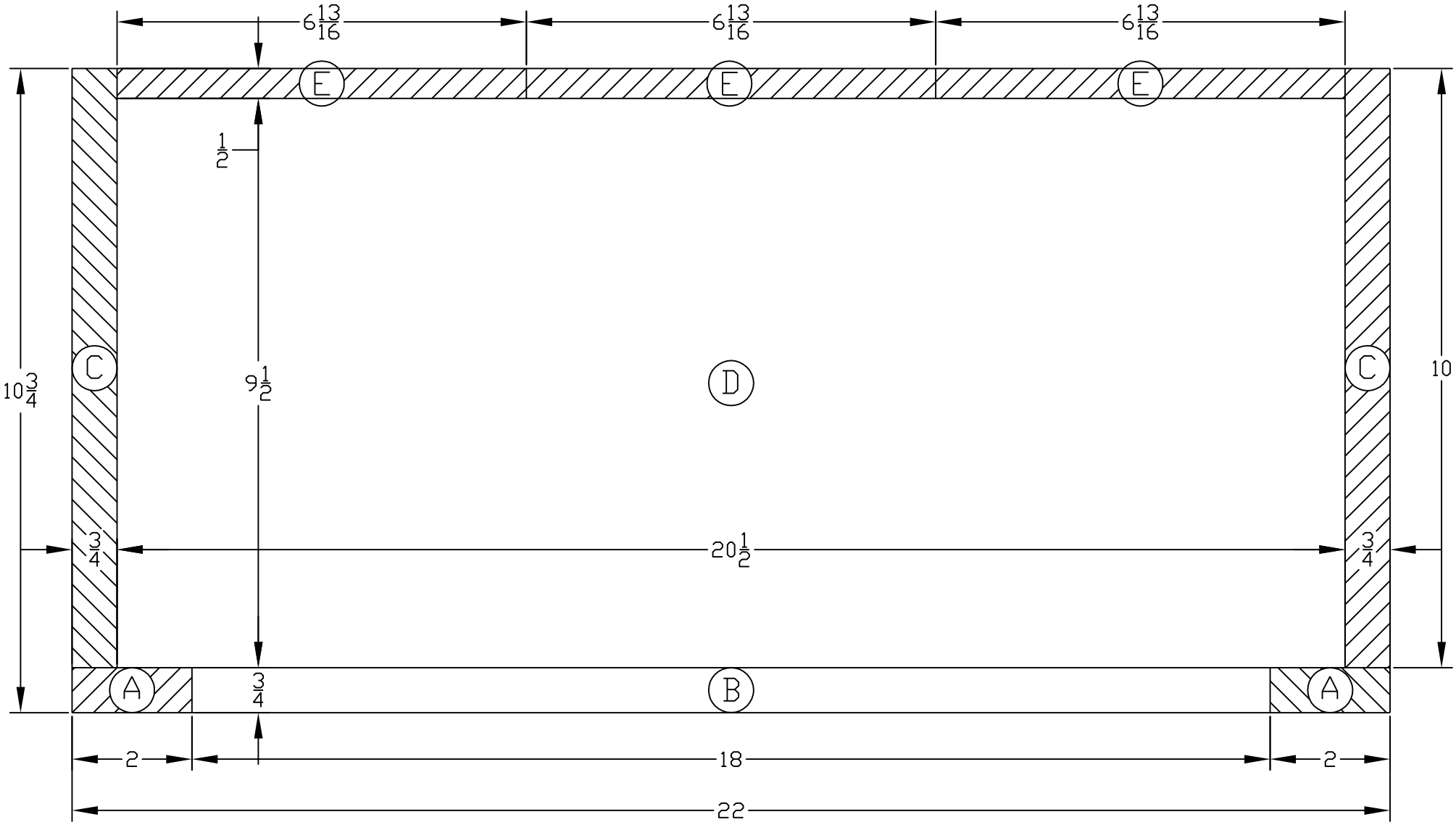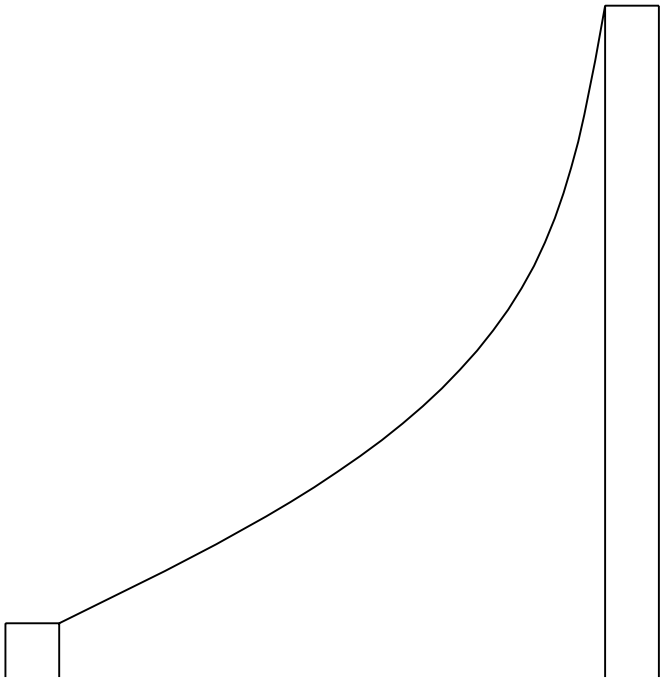
6 13/16
6 13/16
6 13/16
E
E
E
1/2
10 3/4
9 1/2
C
D
C
10
3/4
20 1/2
3/4
A
3/4
B
A
2
18
2
22